I.B. DICKINSON
AND SONS, INC.
CRANE SERVICE
1·800·662·5995
DICKINSON
300
LIEBHERR
OVERSIZE LOAD
DICKINSON
CRANE SERVICE
1·800·662·5995
USDOT 419464

Mobile Crane/Grue mobile
LTM 1250-5.1

LIEBHERR

Lifting heights
Hauteurs de levage

T

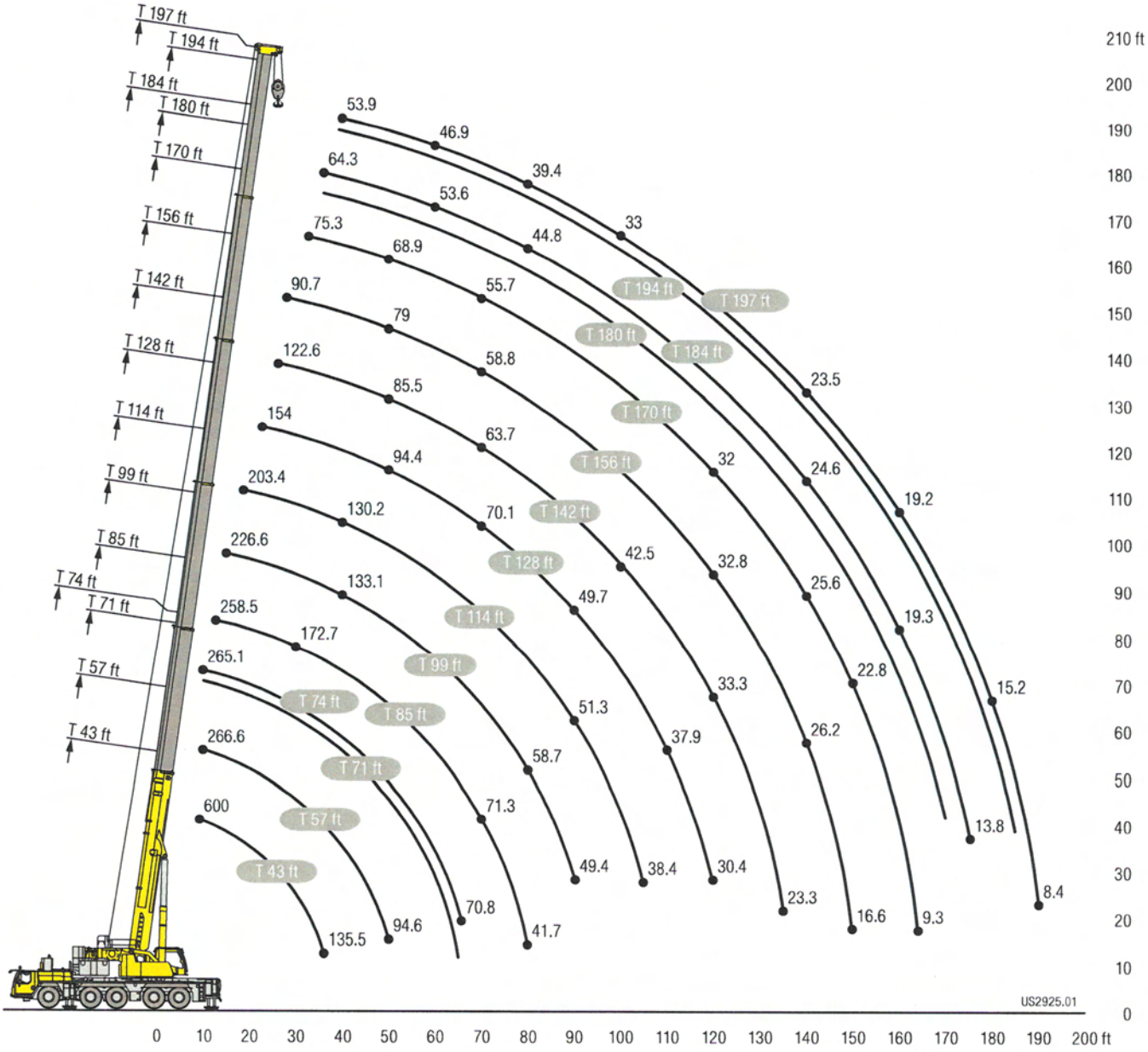

LTM 1250-5.1 -- 088930

194,000 lb	18 ft	30.5 x 27.2ft	360°

	x1000 lb													
ft	**42.8**	**57.0**	**71.2**	**73.6**	**85.3**	**99.5**	**113.7**	**127.9**	**142.0**	**156.2**	**170.3**	**180.2**	**194.4**	**196.8**
10	295.4	260.9												
12	295.4	268.9	260.8	260.4										
14	288.8	271.7	269.0	264.1	261.0									
16	268.9	268.1	267.8	261.9	258.9	243.9								
18	249.6	249.8	249.7	246.6	243.8	234.6								
20	232.3	233.6	232.6	229.3	227.3	220.8	202.6							
25	196.7	198.1	198.3	193.7	196.9	192.0	183.2	148.7	121.2					
30	169.6	171.1	171.4	166.4	172.7	168.4	161.7	135.6	117.5	99.9				
35	146.2	149.8	150.1	145.7	151.5	150.3	144.0	121.6	110.2	95.7	78.7			
40		132.1	133.7	129.0	133.9	133.1	130.2	111.3	101.9	90.6	76.0	63.1	55.2	53.9
45		118.3	119.2	114.2	119.2	118.3	116.9	102.4	93.1	84.7	72.7	61.0	53.7	52.4
50		94.6	106.7	101.2	106.7	105.8	104.4	94.4	85.5	79.0	68.9	58.6	51.8	50.4
60			86.4	80.8	86.4	85.5	84.0	81.3	72.6	67.9	62.3	53.6	47.7	46.9
70					71.2	70.2	68.6	70.1	63.7	58.8	55.7	49.0	43.6	43.0
80					40.0	58.7	59.9	58.5	56.6	52.1	49.3	44.8	39.7	39.4
90						49.4	51.2	49.7	49.3	46.6	43.9	40.9	36.4	36.0
100							44.5	42.9	42.5	41.7	39.2	37.2	33.4	33.0
110								37.9	38.0	37.5	35.2	33.7	30.8	30.2
120								30.4	33.3	32.8	32.0	30.5	28.4	27.7
130									29.5	29.0	28.7	27.7	26.3	25.5
140										26.2	25.6	24.6	24.4	23.5
150										20.0	22.7	21.7	21.9	21.6
170												17.1	17.2	17.1
190														8.4
191														6.6

Lifting heights
Hauteurs de levage

TNZK

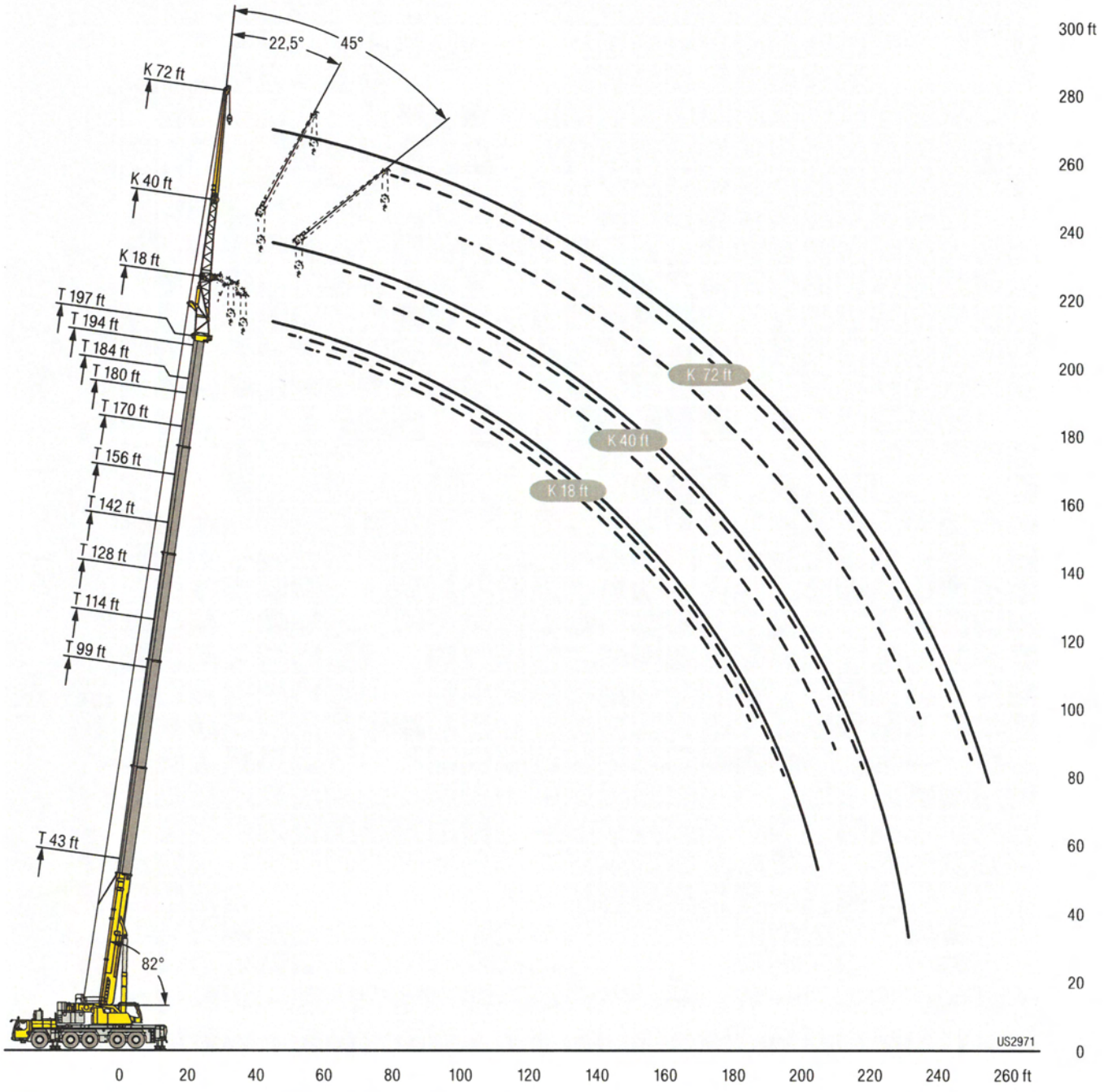

LTM 1250-5.1 -- 088930

194,000 lb	CTWS 18 ft	30.5 x 27.2ft	360°

TNZK: 72ft Swing Away Jib

	x1000 lb.														
ft	**156.2**			**170.3**			**180.2 - 184.5**			**194.4**			**196.8**		
°	**0.0°**	**22.5°**	**45.0°**	**0.0°**	**22.5°**	**45.0°**	**0.0°**	**22.5°**	**45.0°**	**0.0°**	**22.5°**	**45.0°**	**0.0°**	**22.5°**	**45.0°**
20															
25															
30															
35	18.4														
40	18.4			17.0			15.3								
45	18.3			17.0			15.4			14.3			14.1		
50	18.1			16.9			15.4			14.3			14.1		
60	17.5			16.6			15.3			14.3			14.1		
70	16.8	13.9		16.0	13.5		15.0			14.2			14.0		
80	16.1	13.2		15.4	12.9		14.5	12.4		13.8	12.0		13.7	12.0	
90	15.4	12.6	10.5	14.9	12.4	10.3	14.0	11.9		13.4	11.6		13.3	11.6	
100	14.7	12.0	10.2	14.3	11.8	10.1	13.6	11.5	9.9	13.1	11.2	9.8	13.0	11.2	9.7
110	14.0	11.6	10.0	13.7	11.4	9.9	13.1	11.1	9.7	12.7	10.8	9.6	12.6	10.8	9.6
120	13.3	11.1	9.8	13.1	11.0	9.7	12.6	10.8	9.6	12.2	10.5	9.5	12.2	10.5	9.5
130	12.7	10.8	9.7	12.5	10.7	9.6	12.1	10.5	9.5	11.8	10.3	9.4	11.8	10.2	9.4
140	12.1	10.4	9.6	12.0	10.4	9.5	11.7	10.2	9.4	11.4	10.0	9.3	11.4	10.0	9.3
150	11.5	10.2	9.5	11.5	10.1	9.5	11.3	9.9	9.4	11.0	9.8	9.3	11.0	9.8	9.3
170	10.6	9.7	9.5	10.6	9.7	9.5	10.5	9.6	9.4	10.4	9.5	9.3	10.4	9.5	9.3
190	9.9	9.6	9.5	10.0	9.5	9.5	9.9	9.4	9.4	9.8	9.3	9.3	9.8	9.2	9.3
210	9.2	9.6		9.5	9.5	9.5	9.5	9.3	9.4	9.3	9.2	9.3	9.4	9.2	9.3
230				7.5			8.1	8.6	8.5	8.0	8.6	8.7	7.9	8.5	8.6
250										5.6	6.6		5.9	6.5	
259													2.7		